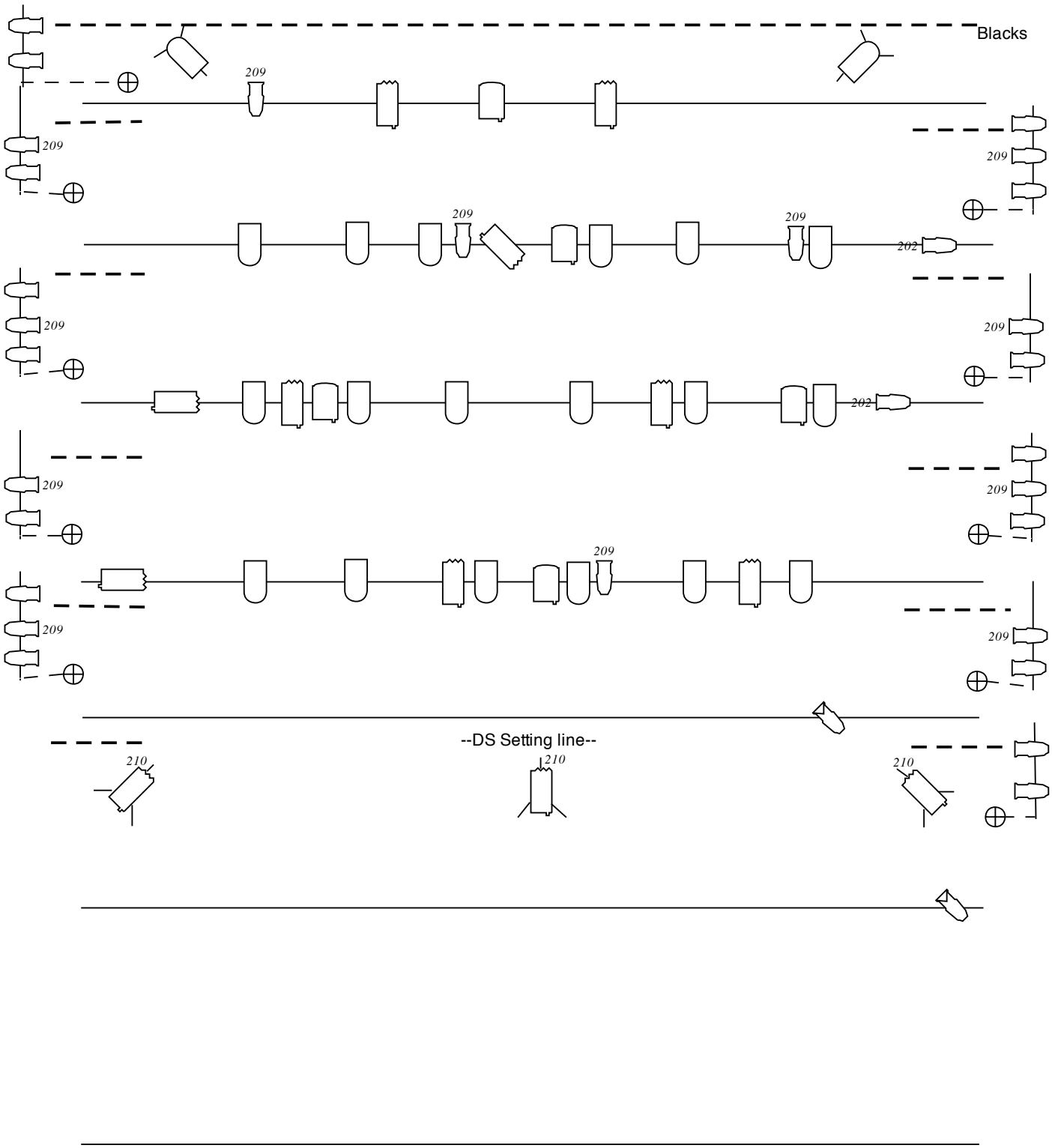

Double Points:K/Supernova

Venue: Tour generic rig

Designer: Mark Parry (Supernova) Henk Danner (Double Points)

25/09/2008

Key

- Location
- Fresnel
- PC
- Zoom profile 25-50
- Zoom profile 15-30
- par64mfl CP62